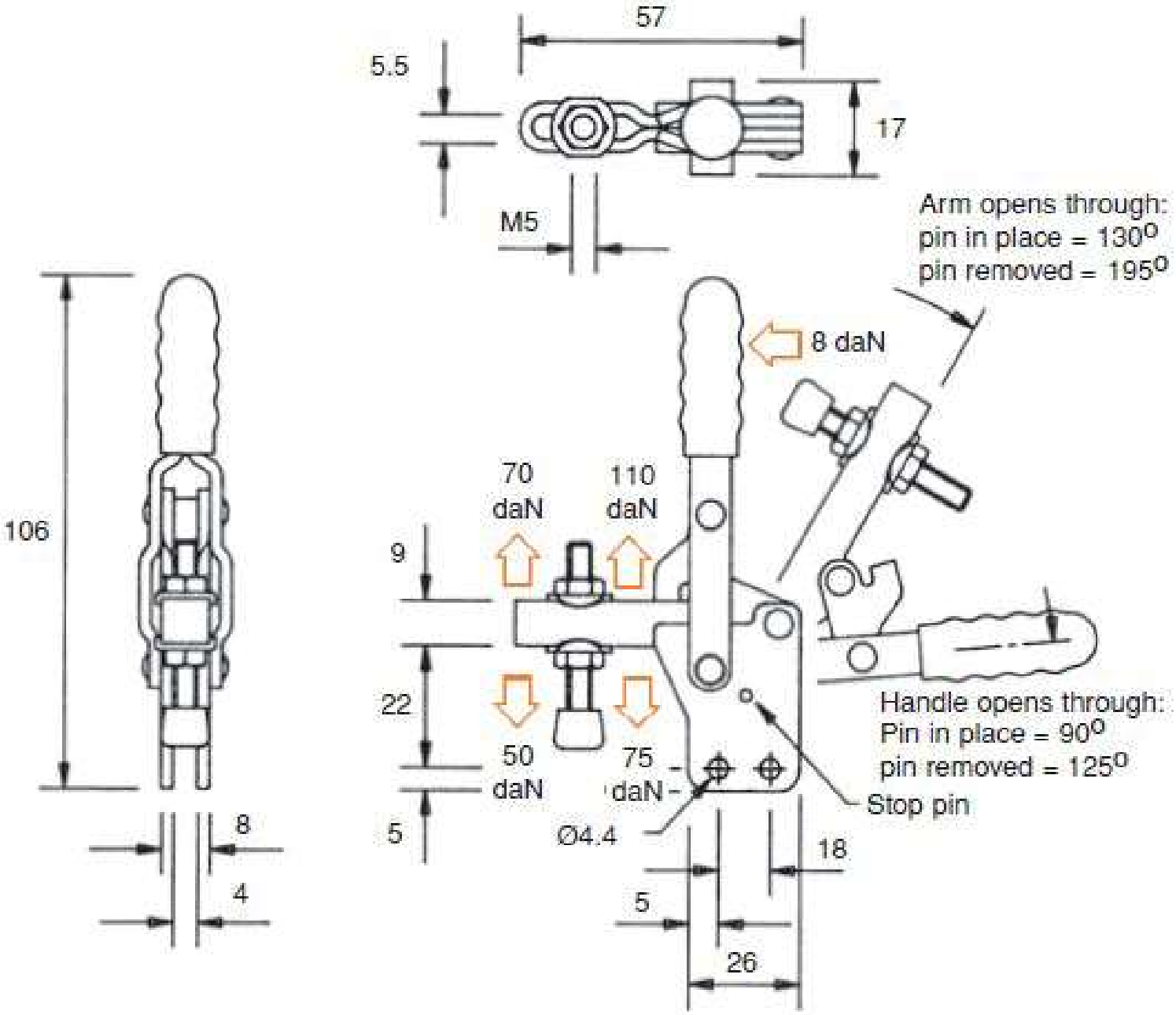
57
5.5
17
M5
Arm opens through:
pin in place = 130°
pin removed = 195°
8 daN
106
70
daN
110
daN
9
22
50
daN
75
daN
5
Ø4.4
Handle opens through:
Pin in place = 90°
pin removed = 125°
Stop pin
8
4
18
5
26